# Serie | 2, Wall-mounted cooker hood, 60 cm, Black
# DWK67EM60B

B

LED Light

- **Especially silent:** maximum hood performance, minimum noise.
- **TouchSelect control:** Quickly select hood settings via touch.
- **LED Illumination:** The energy-saving lighting provides bright and clear lighting for the hob area.
- **Intensive speed setting:** removes strong kitchen odours quickly and effectively.
- An impressive extraction rate of m3/h ensures this hood will have your kitchen odour free in no time.

**Technical Data**

Typology : Wall-mounted
Approval certificates : CE, E17D UKCA marking, VDE
Length of electrical supply cord : 130 cm
Height of the chimney : 484-770/554-830 mm
Height of product, without chimney : 296 mm
Minimum distance above an electric hob : 450 mm
Minimum distance above a gas hob : 650 mm
Net weight : 14.4 kg
Type of control : Electronic
Maximum output air extraction : 399 $m^3$/h
Boost position output recirculating : 474 $m^3$/h
Maximum output recirculating air : 349 $m^3$/h
Boost position air extraction : 669 $m^3$/h
Number of lights (Stck) : 2
Noise level : 60 dB(A) re 1 pW
Diameter of air outlet : 120 / 150 mm
Grease filter material : Washable aluminium
EAN code : 4242005199723
Connection rating : 255 W
Fuse protection : 10 A
Voltage : 220-240 V
Frequency : 50; 60 Hz
Plug type : GB plug
Installation type : Wall-mounted

**Optional accessories**

DHZ1225 : Chimney extension 1000 mm
DHZ1235 : Chimney extension 1500 mm
DHZ5276 : Standard odor filter (replacement)
DHZ6551 : Brushed steel back panel
DWZ0XX0J0 : Long Life recirculation kit
DWZ1DX1I6 : Clean Air Plus recirculation kit
DWZ1EK1U1 : Standard recirculation kit
DWZ1FX5C6 : Clean Air Plus recirc. kit external
DZZ1XX1B6 : Clean Air Plus odor filter (replacement)

4 242005 199723

## Serie | 2, Wall-mounted cooker hood, 60 cm, Black
## DWK67EM60B

**Key performance features:**

- Energy Efficiency Class: B (at a range of energy efficiency classes from A+++ to D)
- Extraction rate according to EN 61591 ø 15 cm:
  max. Normal use 399 $m^3$/h
  Intensive 669 $m^3$/h
- Noise max. Normal Level: Noise, max. speed in normal us: 60 dB dB*

**Design**

- TouchControl with Electronic display
- 3 power levels & intensive setting
- 2 x 1.5W LED light
- Colour Temperature: 3500 K
- Automatic intensive revert (6mins)
- 2 removable metal grease filter cassettes
- Installation: wall
- Chimney extractor hood
- Rim ventilation
- TouchControl
- Electronic control

**Performance/technical information**

- Suitable for ducted or recirculating operation
- For recirculated extraction recirculating kit or CleanAir recirculating kit (accessory) needed
- Extraction rate according to EN 61591 max. 669 $m^3$/h
- Noise level according to EN 60704-3 and EN 60704-2-13 at maximum normal setting: extraction rate: 60 dB (A) re 1pW
- Noise level according to EN 60704-3 and EN 60704-2-13 at max. normal use exhaust air: 60 dB(A) re 1 pW
- Noise level according to EN 60704-3 and EN 60704-2-13 exhaust air:
  Max. normal use: 60 dB(A) re 1 pW
  Intensive: 69 dB(A) re 1 pW
- With the Clean Air Plus recirculation kit (available as optional accessory) your appliances reaches:
  Extraction rate in recirculation mode:
  Max. normal use: 349 $m^3$/h
  Intensive: 474 $m^3$/h
  Noise level in recirculation mode:
  Max. normal use: 69 dB(A) re 1 pW
  Intensive: 76 dB(A) re 1 pW
- Power rating: 255 W
- Light Intensity: 130 lux
- Electrical cable length 1.3 m
- Diameter pipe Ø 150 mm (Ø 120 mm enclosed)
- Dimensions exhaust air (HxWxD): 780-1066 x 600 x 434 mm
- Dimensions recirculating (HxWxD): 850-1126 x 600 x 434 mm
- Dimensions recirculating with CleanAir module (HxWxD):
  956 x 600 x 434 mm - mounting with outer chimney
  1016-1306 x 600 x 434 mm - mounting with telescopic chimney
- Blower Efficiency Class: B*
- Lighting Efficiency Class: A*
- Grease Filtering Efficiency Class: C*
- Average Energy Consumption: 59.4 kWh/year*

** In accordance with the EU-Regulation No 65/2014*

## Serie | 2, Wall-mounted cooker hood, 60 cm, Black
## DWK67EM60B

measurements in mm

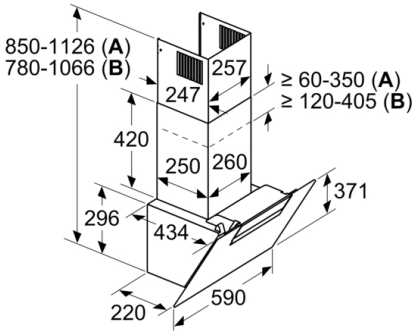


**A**: Circulated air
**B**: Exhaust air – slots to be mounted facing down

Measurements in mm

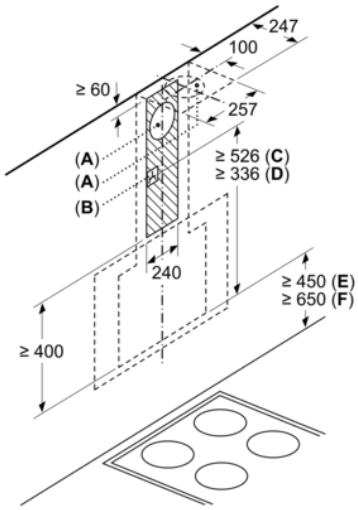


**A:** Exhaust-air outlet
**B:** Socket
**C:** Clean Air Plus circulated air kit

measurements in mm

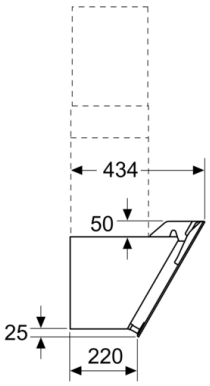


measurements in mm

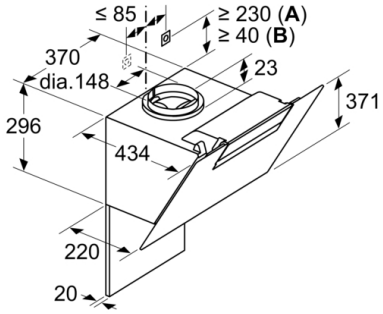


**A**: Integrated Clean Air
**B**: Exhaust air or standard circulated air set

Note the maximum thickness of the back panel.

Measurements in mm

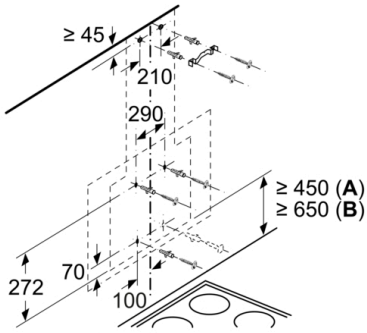


From upper edge of pan support

**A:** Electric
**B:** Gas